DC HIGH TEMPERATURE INDUCTIVE PROXIMITY SWITCH

M8		M12		M18	
●	○	●	○	●	○
1 mm	2 mm	2 mm	4 mm	5 mm	8 mm
stainless steel or nickel plated brass		stainless steel or nickel plated brass		stainless steel or nickel plated brass	
●		●		●	

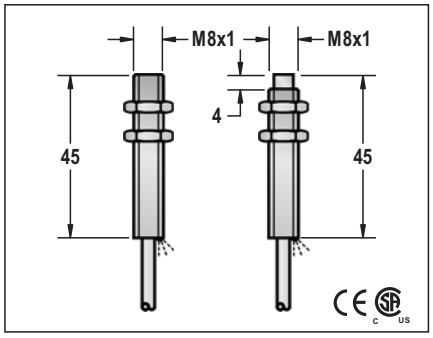

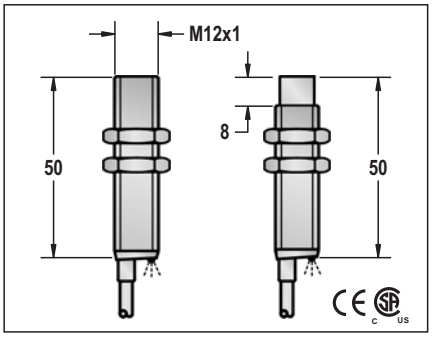

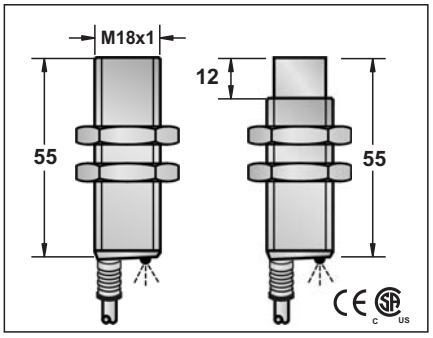

M8	M12		M18	
10-30VDC	10-30VDC		10-30VDC	
<10%	<10%		<10%	
<10mA	<10mA		<10mA	
200mA	200mA		200mA	
<0.01mA	<0.01mA		<0.01mA	
-	-		-	
-	-		-	
<1.5V	<1.5V		<1.5V	
2KHZ	2KHZ	1KHZ	1KHZ	500HZ
0.1ms/0.1ms	0.1ms/0.1ms	0.2ms/0.2ms	0.2ms/0.2ms	0.5ms/0.5ms
<15%	<15%		<15%	
<1.0%(Sr)	<1.0%(Sr)		<1.0%(Sr)	
IP67	IP67		IP67	
-25°C - +100°C	-25°C - +100°C		-25°C - +100°C	
<10%(Sr)	<10%(Sr)		<10%(Sr)	
YES	YES		YES	
220mA	220mA		220mA	
<10ms	<10ms		<10ms	
RFI>3V/m / EFT>1KV / ESD>4KV (contact)	RFI>3V/m / EFT>1KV / ESD>4KV (contact)		RFI>3V/m / EFT>1KV / ESD>4KV (contact)	
IEC 60947-5-2,Part 7.4.1 / IEC 60947-5-2,Part 7.4.2	IEC 60947-5-2,Part 7.4.1 / IEC 60947-5-2,Part 7.4.2		IEC 60947-5-2,Part 7.4.1 / IEC 60947-5-2,Part 7.4.2	
POM	POM	PBT	PBT	

TCM1-0801N-A3U2	1	TCM2-0802N-A3U2	TCM1-1202N-A3U2	1	TCM2-1204N-A3U2	TCM1-1805N-A3U2	1	TCM2-1808N-A3U2
TCM1-0801N-B3U2	2	TCM2-0802N-B3U2	TCM1-1202N-B3U2	2	TCM2-1204N-B3U2	TCM1-1805N-B3U2	2	TCM2-1808N-B3U2
TCM1-0801P-A3U2	3	TCM2-0802P-A3U2	TCM1-1202P-A3U2	3	TCM2-1204P-A3U2	TCM1-1805P-A3U2	3	TCM2-1808P-A3U2
TCM1-0801P-B3U2	4	TCM2-0802P-B3U2	TCM1-1202P-B3U2	4	TCM2-1204P-B3U2	TCM1-1805P-B3U2	4	TCM2-1808P-B3U2
TCM1-0801P-S4U2	6	TCM2-0802P-S4U2	TCM1-1202P-S4U2	6	TCM2-1204P-S4U2	TCM1-1805P-S4U2	6	TCM2-1808P-S4U2
TCM1-0801N-S4U2	5	TCM2-0802N-S4U2	TCM1-1202N-S4U2	5	TCM2-1204N-S4U2	TCM1-1805N-S4U2	5	TCM2-1808N-S4U2
TCM1-0801C-A2U2	7	TCM2-0802C-A2U2	TCM1-1202C-A2U2	7	TCM2-1204C-A2U2	TCM1-1805C-A2U2	7	TCM2-1808C-A2U2
TCM1-0801C-B2U2	8	TCM2-0802C-B2U2	TCM1-1202C-B2U2	8	TCM2-1204C-B2U2	TCM1-1805C-B2U2	8	TCM2-1808C-B2U2

Please see Page 18 for details and specifications of DC 2-Wire models on this page.

M8	M12	M18
PVC105 3 ϕ 3x0.15	PVC105 4 ϕ 3x0.34	PVC105 5.0 ϕ 44x0.1
approx.40g	approx.67g	approx.153g

Note:
Coming Soon : Part numbers with underline
In Preparation: Part numbers with a line through the middle

DC HIGH TEMPERATURE INDUCTIVE PROXIMITY SWITCH

M30		Q80	
●	○	●	○
10 mm	15 mm	40 mm	50 mm
stainless steel or nickel plated brass		PBT RESIN	
●		●	

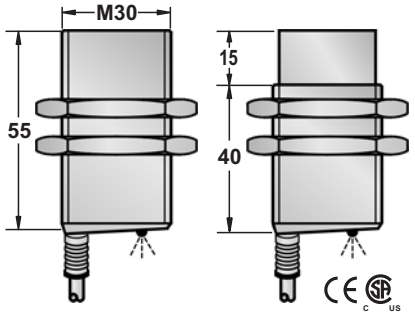

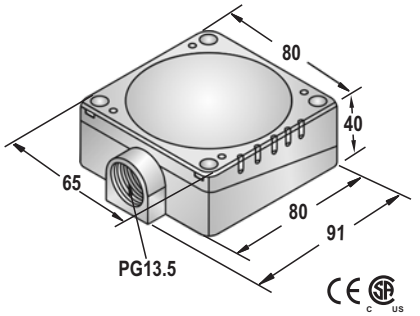

M30		Q80
10-30VDC		10-30VDC or 10-55VDC
<10%		<10%
<10mA		<10mA
200mA		200mA
<0.01mA		<0.01mA
-		-
-		-
<1.0V		<1.5V(10-30V) or <2.0V(10-55V)
300HZ	150HZ	100HZ
0.5ms/0.5ms	1ms/1ms	1ms/1ms
<15%		<15%
<1.0%(Sr)		<1.0%(Sr)
IP67		IP67
-25 °C - +100 °C		-25 °C - +100 °C
<10%(Sr)		<10%(Sr)
YES		YES
220mA		220mA
<10ms		<10ms
RFI>3V/m / EFT>1KV / ESD>4KV (contact)		RFI>3V/m / EFT>1KV / ESD>4KV (contact)
IEC 60947-5-2,Part 7.4.1 / IEC 60947-5-2,Part 7.4.2		IEC 60947-5-2,Part 7.4.1 / IEC 60947-5-2,Part 7.4.2
PBT		PBT

TCM1-3010N-A3U2	1	TCM2-3015N-A3U2	TQP1-8040N-A3UT	1	TQP2-8050N-A3UT
TCM1-3010N-B3U2	2	TCM2-3015N-B3U2	TQP1-8040N-B3UT	2	TQP2-8050N-B3UT
TCM1-3010P-A3U2	3	TCM2-3015P-A3U2	TQP1-8040P-A3UT	3	TQP2-8050P-A3UT
TCM1-3010P-B3U2	4	TCM2-3015P-B3U2	TQP1-8040P-B3UT	4	TQP2-8050P-B3UT
TCM1-3010P-S4U2	6	TCM2-3015P-S4U2	TQP1-8040P-S4UT	6	TQP2-8050P-S4UT
TCM1-3010N-S4U2	5	TCM2-3015N-S4U2	TQP1-8040N-S4UT	5	TQP2-8050N-S4UT
TCM1-3010C-A2U2	7	TCM2-3015C-A2U2	TQP1-8040C-A2UT	7	TQP2-8050C-A2UT
TCM1-3010C-B2U2	8	TCM2-3015C-B2U2	TQP1-8040C-B2UT	8	TQP2-8050C-B2UT

Please see Page 18 for details and specifications of DC 2-Wire models on this page.

M30	Q80
PVC105 5.8⌀3x0.5	
approx.217g	Approx.110g

Note:
Coming Soon : Part numbers with underline